LEFROY BROOKS

LB1721

CLASSIC WALL MOUNTED TWO-WAY DIVERTER

(Ø75MM WALL PLATE)

DIMENSIONAL DATA SHEET

DATE: 01/05/2024

REVISION: D

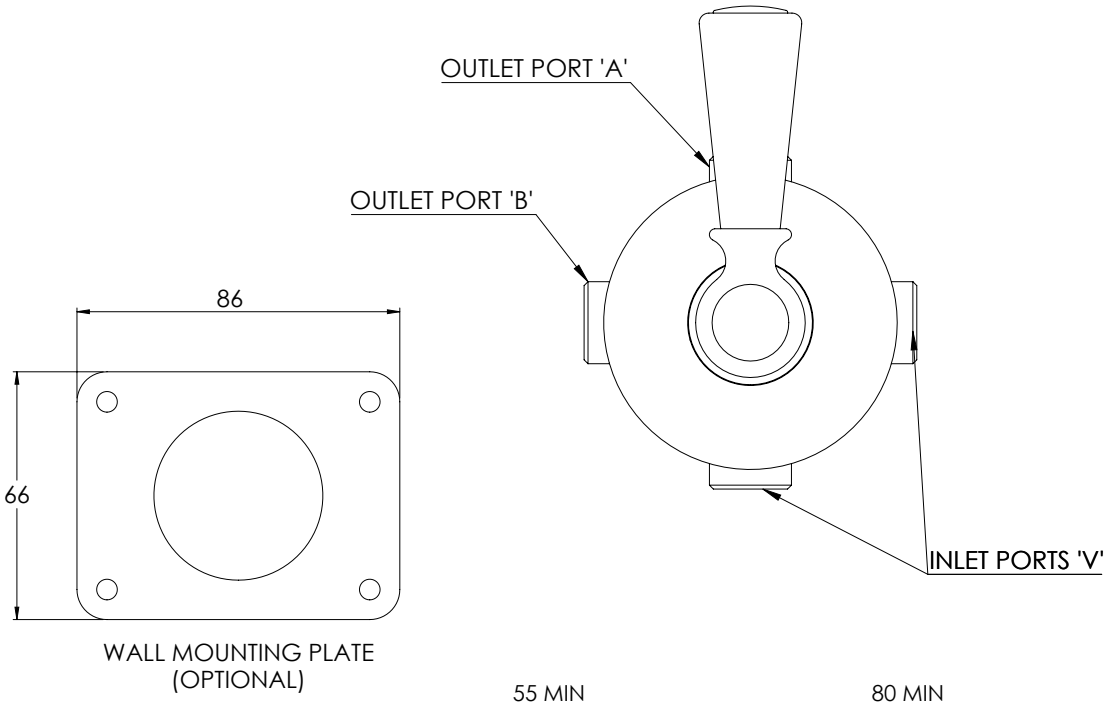

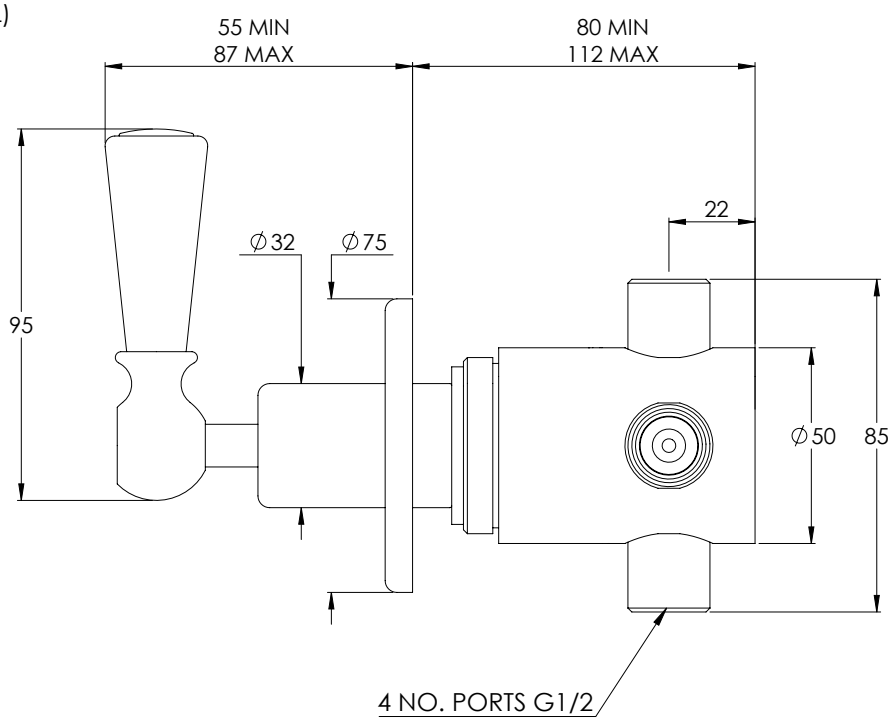

DIMENSIONS IN MILLIMETRES

COPYRIGHT © LBIP LTD. ALL RIGHTS RESERVED

WHILST EVERY EFFORT IS MADE TO ENSURE THE ACCURACY OF THESE DATA SHEETS THEY ARE SUBJECT TO CHANGE WITHOUT NOTICE AS PART OF THE COMPANY'S PRODUCT DEVELOPMENT PROCESS