LEFROY BROOKS

MK8803

MACKINTOSH ARCHIPELAGO THERMOSTATIC VALVE
WITH FLOW CONTROLS & EASY CLEAN HAND SHOWER

DIMENSIONAL DATA SHEET

DATE: 18/04/2024

REVISION: B

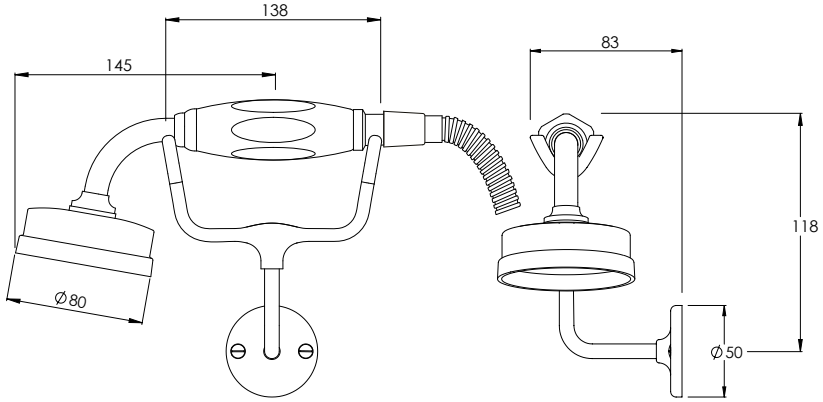

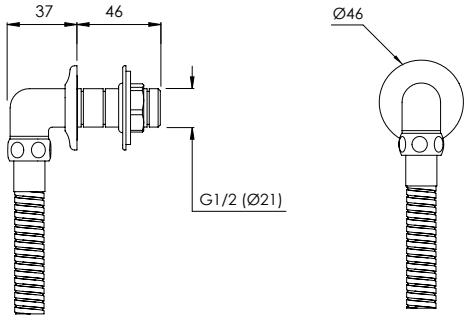

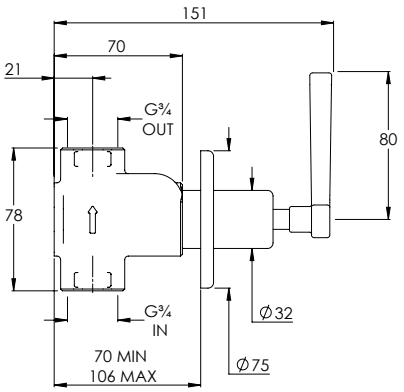

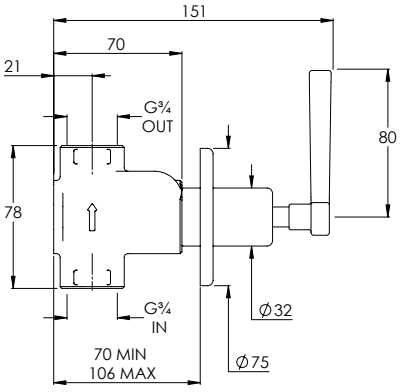

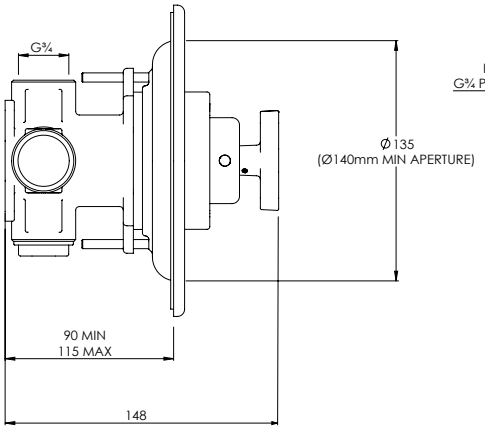

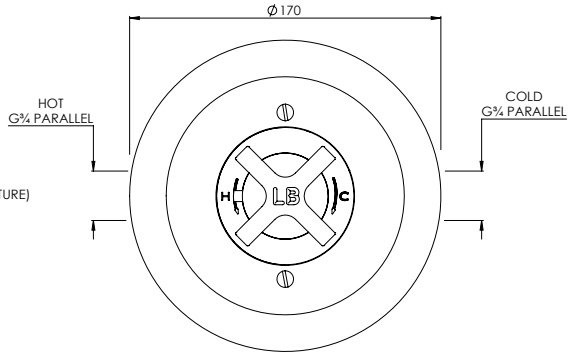

DIMENSIONS IN MILLIMETRES

COPYRIGHT © LBIP LTD. ALL RIGHTS RESERVED

WHILST EVERY EFFORT IS MADE TO ENSURE THE ACCURACY OF THESE DATA SHEETS THEY ARE SUBJECT TO CHANGE WITHOUT NOTICE AS PART OF THE COMPANY'S PRODUCT DEVELOPMENT PROCESS