TapShop.co.uk

london 1916 xhead basin mixer with pop-up waste

The London collection draws inspiration from the Edwardian era, blending the grandeur of Victorian design with the simplicity of Art Deco. The ceramic indices and levers feature a subtle cream crackle glaze, hand-finished in Staffordshire—a region known for skilled ceramics craftsmen. Combining traditional materials like brass and ceramic with modern innovations, the collection features the EasyBox system for hassle-free installation. Crafted in lead free brass, it reflects a commitment to efficiency, design, and sustainable production.
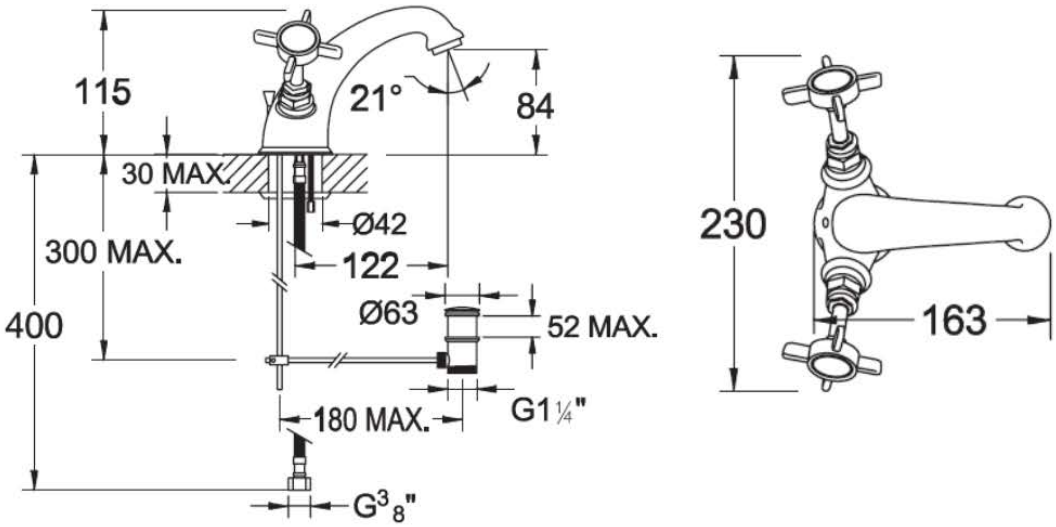
Material	solid brass
Finish	chrome, nickel
Min. pressure	0.2 bar
Waste	pop-up waste included