TapShop.co.uk

tapshop knurl bath shower mixer on floor pillars with handshower holder

Our TapShop Knurl range of brassware is sure to make a statement in your bathroom. The industrial style is complemented by the circular handles with a tactile grip.
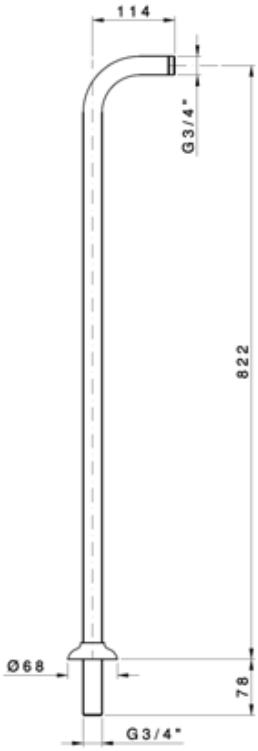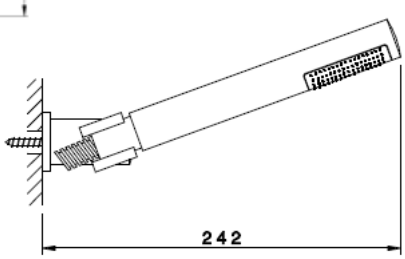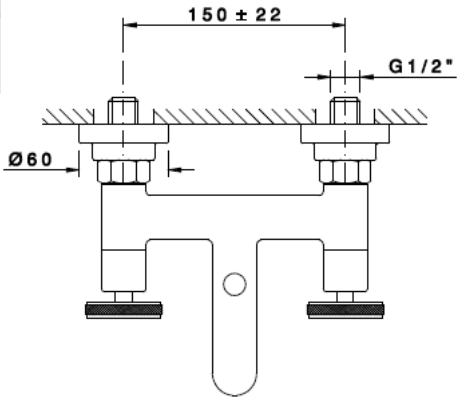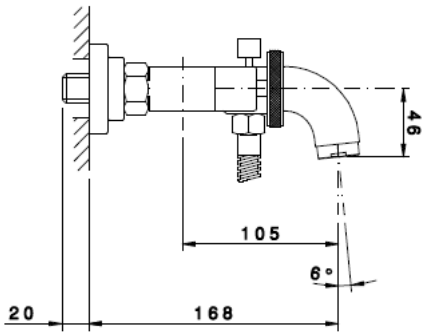
Material	solid brass
Finishes	chrome, scuffed brass - a living finish that can be polished to maintain its original look, or if left, will tarnish naturally and assume a characterful deep patina with age, bespoke finishes upon request.
Min. pressure	Minimum 1 bar, maximum 5 bar, recommended 3 bar