LEFROY BROOKS

# WL1220

CLASSIC BASIN MIXER WITH WHITE LEVERS
AND POP-UP WASTE

DIMENSIONAL DATA SHEET

DATE: 02/01/2019

REVISION: D

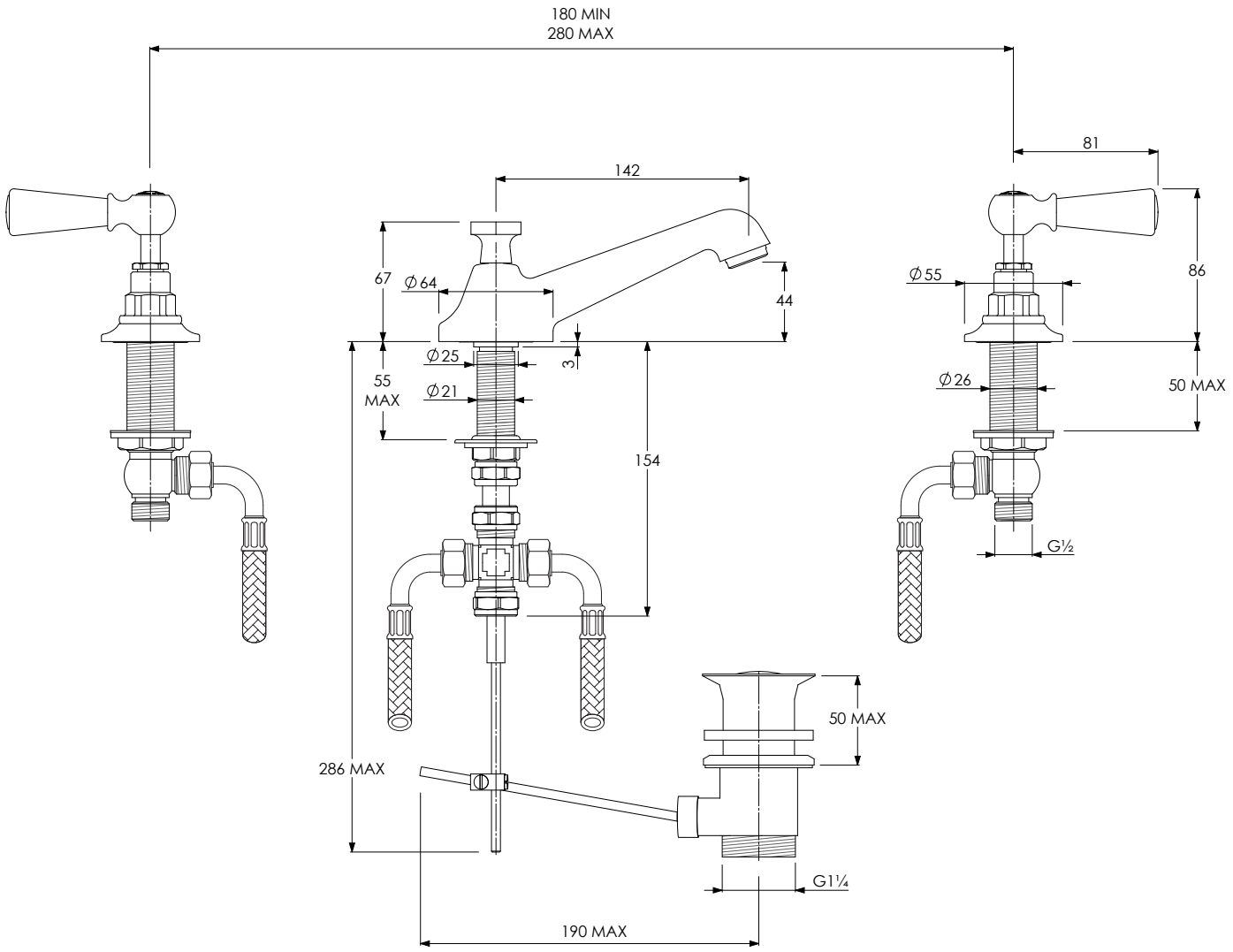


DIMENSIONS IN MILLIMETRES

COPYRIGHT © LBIP LTD. ALL RIGHTS RESERVED

WHILST EVERY EFFORT IS MADE TO ENSURE THE ACCURACY OF THESE DATA SHEETS THEY ARE SUBJECT TO CHANGE WITHOUT NOTICE AS PART OF THE COMPANY'S PRODUCT DEVELOPMENT PROCESS