LEFROY BROOKS

WL1230

CLASSIC TUBULAR BASIN MIXER WITH HITE LEVERS AND CLICK-UP WASTE

DIMENSIONAL DATA SHEET

DATE: 18/10/2024

REVISION: B

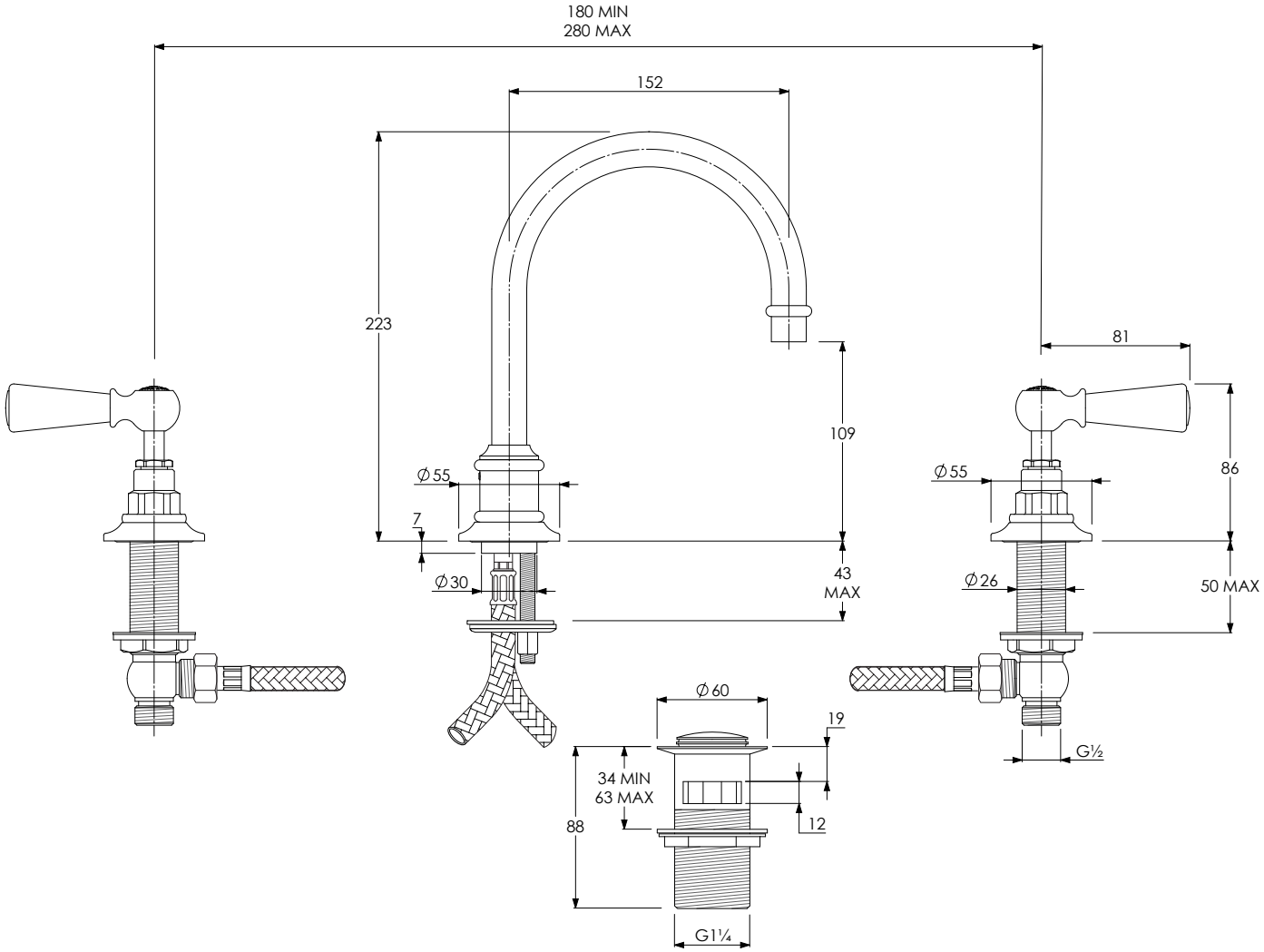

COPYRIGHT © LBIP LTD. ALL RIGHTS RESERVED

DIMENSIONS IN MILLIMETRES

WHILST EVERY EFFORT IS MADE TO ENSURE THE ACCURACY OF THESE DATA SHEETS THEY ARE SUBJECT TO CHANGE WITHOUT NOTICE AS PART OF THE COMPANY'S PRODUCT DEVELOPMENT PROCESS